HIWIN®

Motion Control and System Technology

SCARA Robot

Maintenance Manual

www.hiwin.tw

Company: HIWIN Technologies Corp.
Address: No.7, Jingke Rd., Taichung Precision Machinery Park, Taichung City 40852, Taiwan

Date: July 2016

Version: 3.0

Tel: +886-4-23594510

Fax: +886-4-23594420

E-mail: business@hiwin.tw

Website: http://www.hiwin.tw

Revision History

Version	Date	Remark
Ver1.0	2014/11	First issuance
Ver2.0	2016/03	➢ Adjusted the page ➢ Changed the control system ➢ Deleted (Wiring Holder), (Replace J1 Motor), (Replace J2 Motor), (Replace J3 and J4 Motors), (Replace Z-axis Belt), and (Step to Install Decelerator)
Ver.3.0	2016/07	➢ Adjusted the page ➢ Changed SCARA figures ➢ Added an example of rotation inertia ➢ Added maximum torque limit and calculation ➢ Edited ball screw spline and decelerator lubrication

Table of Content

Table of Content I
Foreword 4
About Manual 4
Warranty 5
Notice Symbol 6
Contact 7
Customer Service 7
About Safety 8
1 About Safety 9
1-1 Operation 9
1-2 Safety Symbol 10
1-3 Operation Notice 13
1-3-1 Run Alert Area 13
1-3-2 Temperature Error 13
1-3-3 Flammability Alert 13
1-3-4 Humidity Error 14
1-3-5 High Voltage 14
1-4 Emergency Stop 15
1-4-1 Robot Operation in Emergency Stop 16
2 Specifications 17
2-1 Features 17
2-2 Model Name 17
2-3 Part Name and Dimensions 18
2-4 Specification Table 22
3 Operating Environment 23
3-1 Install Robot 27
3-2 Disassemble Package and Transport 28

3-3 Transportation....29
4 Install End Effector....31
4-1 Installation Notice....31
4-2Overview for Calculating Static Torque and Moment of Inertia....32
4-2-1 Calculate Static Torque....32
4-2-2 Calculate Moment of Inertia....33
Maintenance....35
5 Robot Maintenance....36
5-1 Cover....36
5-1-1 Disassemble Cover....37
5-1-2 Install Cover....38
5-2 J3 & J4 Axes....39
5-2-1 Check J3 & J4 Belts....40
5-3 Grease Lubrication....42
5-3-1 Lubrication of Ball Screw Spline....42
5-3-2 Decelerator Lubrication....44
5-4 Wiring Panel....48
5-4-1 Remove Wiring Panel....48
5-4-2 Install Wiring Panel....49
5-4-3 Replace Battery....50
5-5 Maintenance Period....51
5-6 Maintenance Parts List....53
6 Troubleshooting....54
6-1 Offset....54
6-2 Overheat....54
6-3 Noise from Machine....54
6-4 Jog....55
7 Appendix....56
7-1 EC Declaration of Conformity....56

Opinion Response.....57

Foreword

Thank you for purchasing the Selective Compliance Assembly Robot Arm or Selective Compliance Articulated Robot Arm (SCARA). This manual will provide the method for installing and maintaining the machine, and protect a user life from improper operation. A user should carefully read the description prior to the operation. If the regulations are not followed to cause the machine damage or injury, a user must take the related responsibilities. After you read this manual, please keep it well so that can be read any time.

About Manual

This manual describes the SCARA Robot developed by HIWIN, whose structure includes the body, the control panel, the Teaching Pendant (optional), the connection cable and the software. A user who purchases the robot can operate and maintain the robot via this manual.

This manual is suitable for the SCARA Robot only, which can be operated under the ambient environment, but is not suitable for the related equipment and the operating environment not mentioned in this manual, such as vacuum condition and equipment involved in personal life.

Warranty

The SCARA Robot is strictly tested and examined, and delivered to a customer after its performance meets our requirements.

Warranty Period:

The product provides one-year warranty period from the day since it is delivered. For the detailed terms and clauses of maintenance and repair, please contact the agent.

Warranty Content:

- Guarantee the equipment delivered to customer.
- In the warranty period, we provide free maintenance for failure during the normal operation. The failure after the warranty period is expired will be charged.

Disclaimer:

Even in the warranty period above-mentioned, the service will be charged when the following items are met.

- Failure and damage caused by incorrect operation different from the manual.
  - Reconstruct or remove the robot by yourself.
- Failure and damage caused by improper adjustment/maintenance.
- Failure and damage caused by act of nature disasters/fire/other factors.
  - If you operate the robot in the conditions or specifications beyond the manual, we will not guarantee the basic performances.
  - We should not take any responsibility for human body (death or serious injury)/damage incident/failure caused by not following “WARNINNG” and “CAUTION” in this manual.
  - We can’t completely forecast all conditions for danger and failure. Such ability to forecast shows the limit. Therefore, “WARNINNG”, “CAUTION” and other items in this manual belong to the forecasting scopes.

Notice Symbol

The symbols and warnings on the robot represent the danger in different extents to remind a user of the safety concern during the operation, described as follows.

DANGER

※DANGER symbol: represents an urgent danger. If it can't be stopped and avoided in time, the death or serious injury could take place.

WARNING

※WARNING symbol: represents a potential danger condition. If it can't be solved in time, the injury or death could take place.

CAUTION

※CAUTION symbol: represents a potential danger. If it can't be solved, the injury or the intermediate incident will take place.

NOTE

※NOTE symbol: represents a special purpose or a remark on the product, including the mark qualified by the QC engineer.

Contact

For the maintenance/examination/adjustment on the SCARA Robot, please contact customer service.

Please prepare the following information when you contact us:

- System name/series number
- Software name/version
- Problem on the system

Customer Service

Customer hotline: +866-4-23594510

E-mail: business@hiwin.tw

About Safety

1 About Safety

This chapter mainly describes the operation regulations about the SCARA Robot, which not only provide the detailed operation information for a user and explain the meaning for each alert symbol one by one, but also inform a user of the risk and the emergency response during the operation.

1-1 Operation

For the sake of human body, the following regulations must be obeyed:

- The robot can be operated or maintained by the trained and qualified operators.
- Please carefully read the description in this manual, so that can efficiently and safely operate the robot.
- The operators must be familiar with the position, the function and operation for safety switches.
- Please ensure there are no obstacles stacked around the robot prior to the operation.
- Don’t open or remove the shelter on the robot.
- Please ensure the circuit systems have been indeed grounded prior to the operation.
- Before you replace any circuit, all power must be disconnected to avoid electric shock.
- Please immediately disconnect the main switch during the power failure or disconnection.
- Don’t stain, scratch or move the warning label and product nameplate.

1-2 Safety Symbol

Each type of warning label is stuck on the robot and the control panel to remind a user of operational safety. If the labels are stained or fallen, they must be indeed cleaned or replaced.

Sticking position	Label pattern	Remark
A		The pinch label is stuck on the SCARA Robot. There are many articulated joints on the robot. Please pay attention to your safety during the operation and avoid pinch by accident.
B		There is a hit label on the SCARA Robot. Don't enter the operating area to avoid damage or injury when the robot is operated.
C		There is a high voltage label on the SCARA Robot. Permissible voltage and the maximum current for the robot are 1P 200~240VAC and 10A. A user needs to note the circuit has been indeed grounded or there is any damage. When the robot is removed or any pipe is replaced, please disconnect the power and unplug the power connector to avoid electric shock.
D		Don't touch to avoid injury or part damage.
E	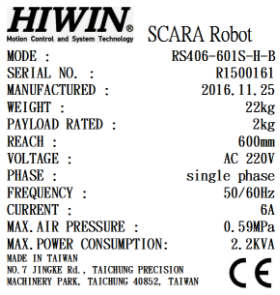	Robot record. When the robot fails, you can provide the information for the supplier.

F		Read the instructions before proceeding.

RS406-601S-H-B/RS406-601C-H-B

Illustration for Safety Symbol

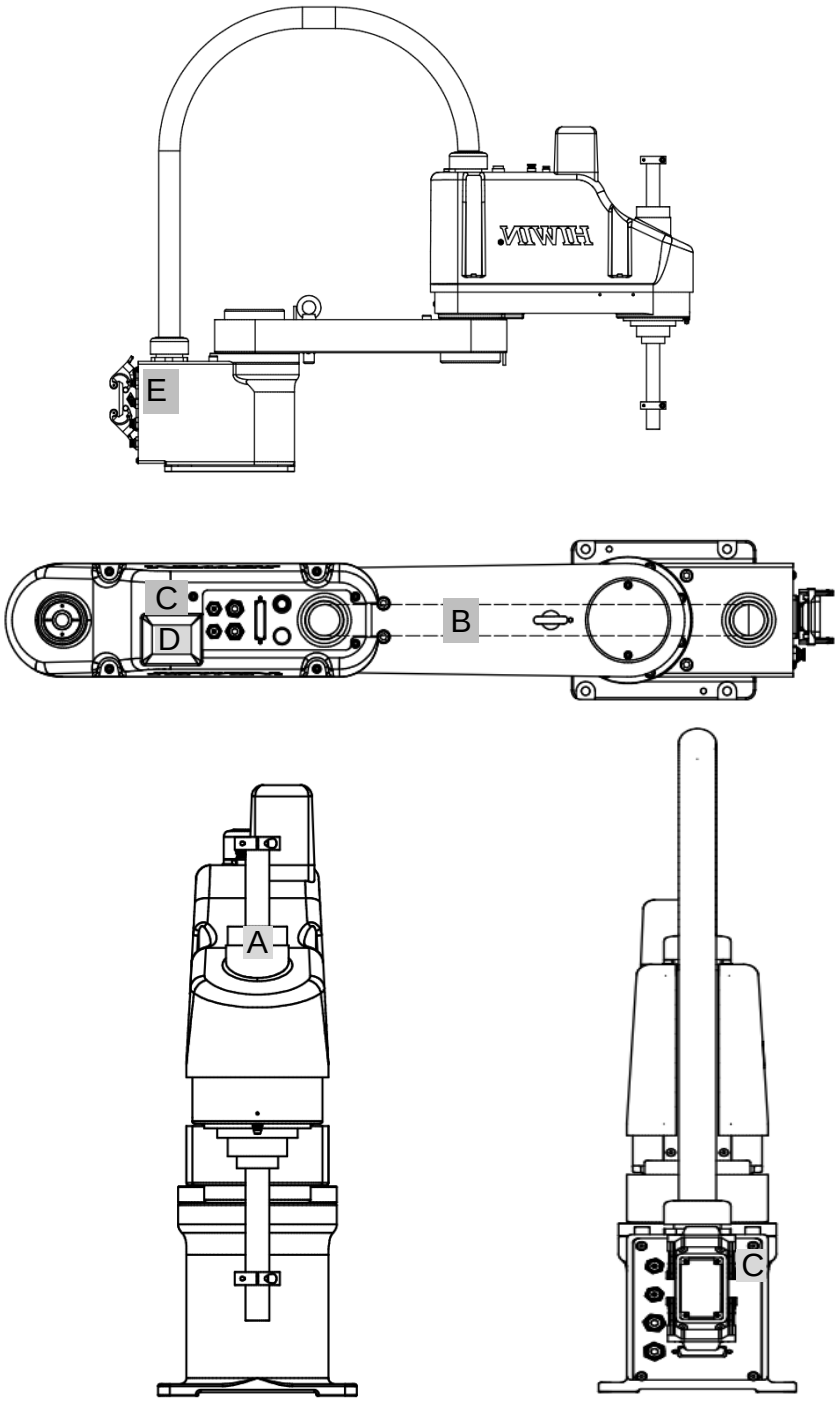

CAUTION	➢ Don’t remove the safety symbol. If it is lost, please contact us or the agent.

1-3 Operation Notice

1-3-1 Run Alert Area

The robot is a machine operating at high speed, whose maximum revolution radius depends on the fixture size installed on the end. Before you operate the robot, please ensure there is no any obstacle within the motion range, and indeed perform the calibration to avoid collision and damage. When the robot is operated, the operator should pay attention to the motion range for damage.

1-3-2 Temperature Error

When the robot is operated, the heat source comes from the electronic parts in the control panel. There are the cooling fans on two side of the panel. The operator should note the cooling fans normally run to prevent shutdown from overheating.

1-3-3 Flammability Alert

If you wipe the robot with volatile detergent or volatile chemicals are used in the

process, please ensure the temperature and the fan condition at any time to avoid a fire.

1-3-4 Humidity Error

CAUTION

Electronic components in the robot and the control panel are made of metal materials, which are more sensitive to the relative humidity of the operating environment. Higher humidity will accelerate to oxidize the contacts of metal part and electronic component, and loosen the assembly structure and cause poor contact; lower humidity will easily generate static electricity and damage electronic components. It is recommended the relative humidity in the ambient environment should be less than 50%.

1-3-5 High Voltage

DANGER

1P 200~240VAC is supplied to the robot. Once electric leakage or touch by accident takes place, it will cause serious injury or death. When you install the robot, you need to check each connector is indeed connected, and ensure all circuits are not excessively bent, even broken or damaged.

1-4 Emergency Stop

If the personal is trapped by axes movement, then the release procedure is shown as below:

Power ON:

Step01. Press the EMG STOP button to stop all movements.

Step02. Press the BRAKE RELEASE button to adjust the arm position.

Power OFF:

Step01. Confirm emergency stop switch has been pressed.

Step02. Turn on the power.

Step03. Press the BRAKE RELEASE button to adjust the arm position.

Don’t press the EMERGENCY STOP button when the arm normally operates. If you press EMERGENCY STOP button during the operation, it could hit the peripherals and internal hardware to cause damage.

The EMERGENCY STOP button is pressed in the urgent condition, not for pause/run. If you want to stop the robot in the normal operation and the working path, please operate it according to the software manual.

1-4-1 Robot Operation in Emergency Stop

When you press the EMERGENCY STOP button, please move the robot according to the following methods. When you perform the operations above-mentioned, please ensure the EMERGENCY STOP button on the robot is pressed and indicated in flash.

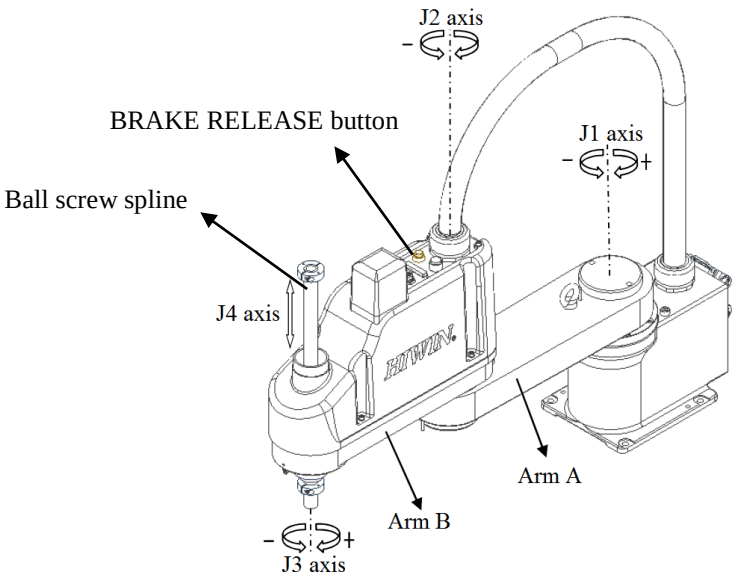

J1 axis: Move Arm A after you press the BRAKE RELEASE button.
J2 axis: Move Arm B after you press the BRAKE RELEASE button.
J3 axis: Rotate ball screw spline after you press the BRAKE RELEASE button.
J4 axis: Pull ball screw spline after you press the BRAKE RELEASE button.

DANGER	➢ Don't apply excessive force to move the robot or quickly rotate the parts after you press the EMERGENCY STOP button. This condition could damage the robot. ➢ Press the BRAKE RELEASE button after you press the EMERGENCY STOP button to simultaneously release the brake for four axes. Note that the object loaded on the end could drop and cause injury or death owing to its weight.

2 Specifications

2-1 Features

The SCARA Robot, suitable for the ambient environment, can be applied for delivering and assembling the components, such as electronic parts. The maximum permissible inertia can reach 0.12 kg-m^2.

2-2 Model Name

RS406-60 1 S - H- B

Lock

B : Standard (fixed on bottom)

Model

H : HIWIN MIKROSYSTEM

Environment

S : Standard

C : Dust-proof (flexible shelter)

J4-axis stroke

1 : 200 mm: Standard specification

2 : 300 mm: Standard specification

3 : 400 mm: Standard specification

Arm length

60 : 600 mm

Maximum load

06 : 6 kg

NOTE	➢ The robot is operated in the standard environment. The accessories with additional coating are installed on the robot to prevent dust accumulation, which can be used for food industry.

2-3 Part Name and Dimensions

RS406-601S-H-B (standard)

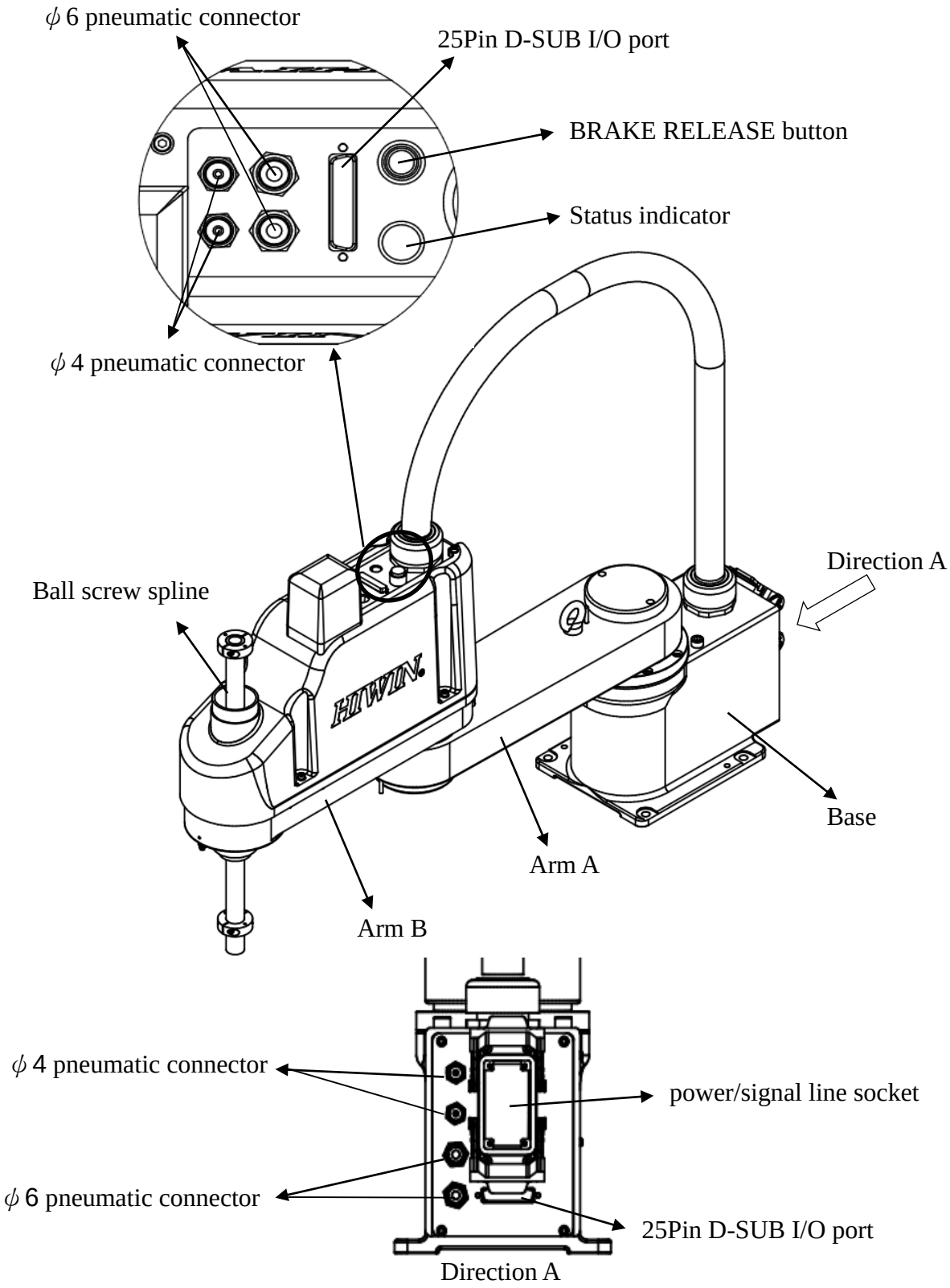

RS406-601S-H-B (standard)

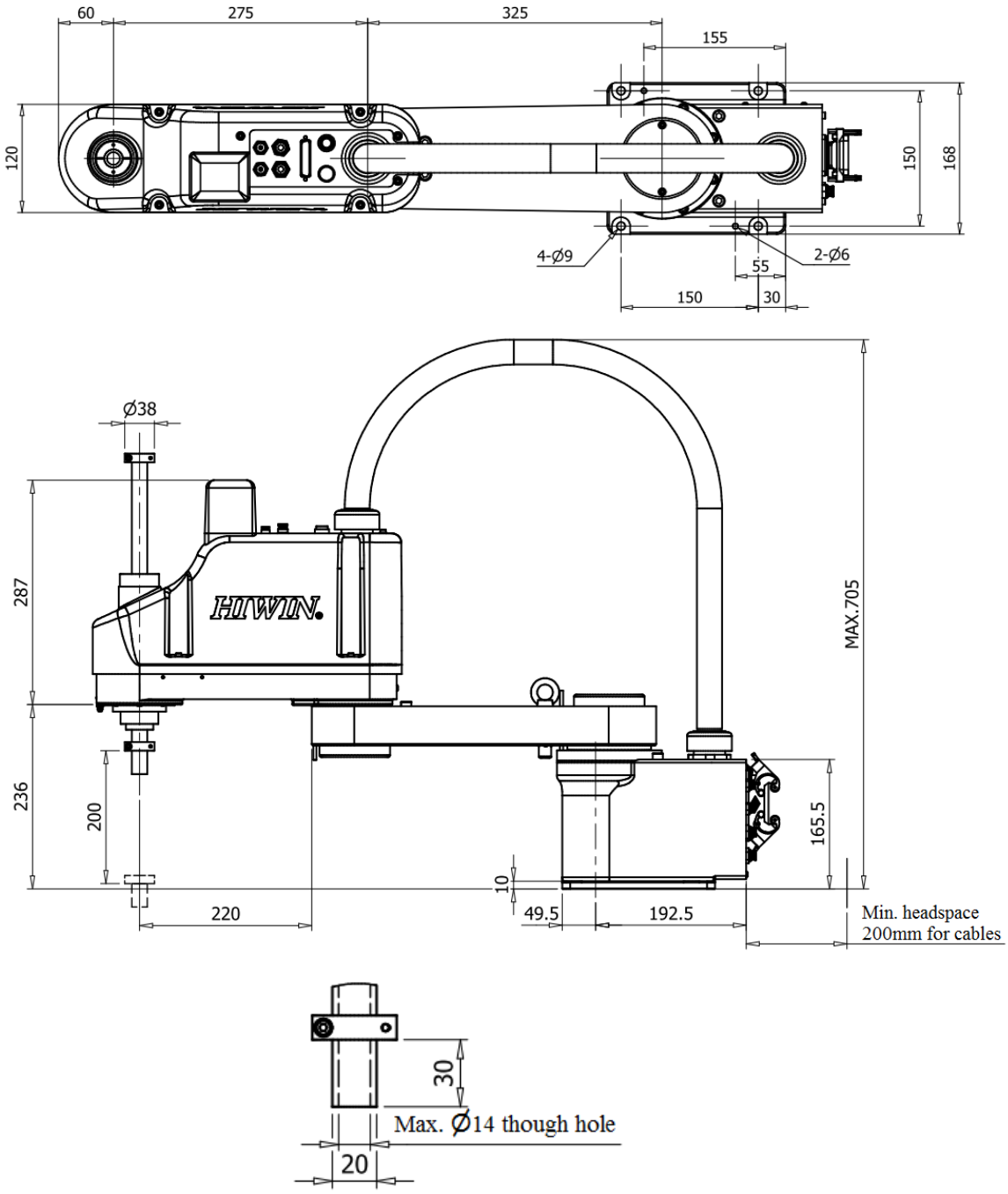

NOTE	➢ This dimension diagram is used for the reference, based on the approved ones or the actual ones.

RS406-601C-H-B (dust-proof – flexible shelter)

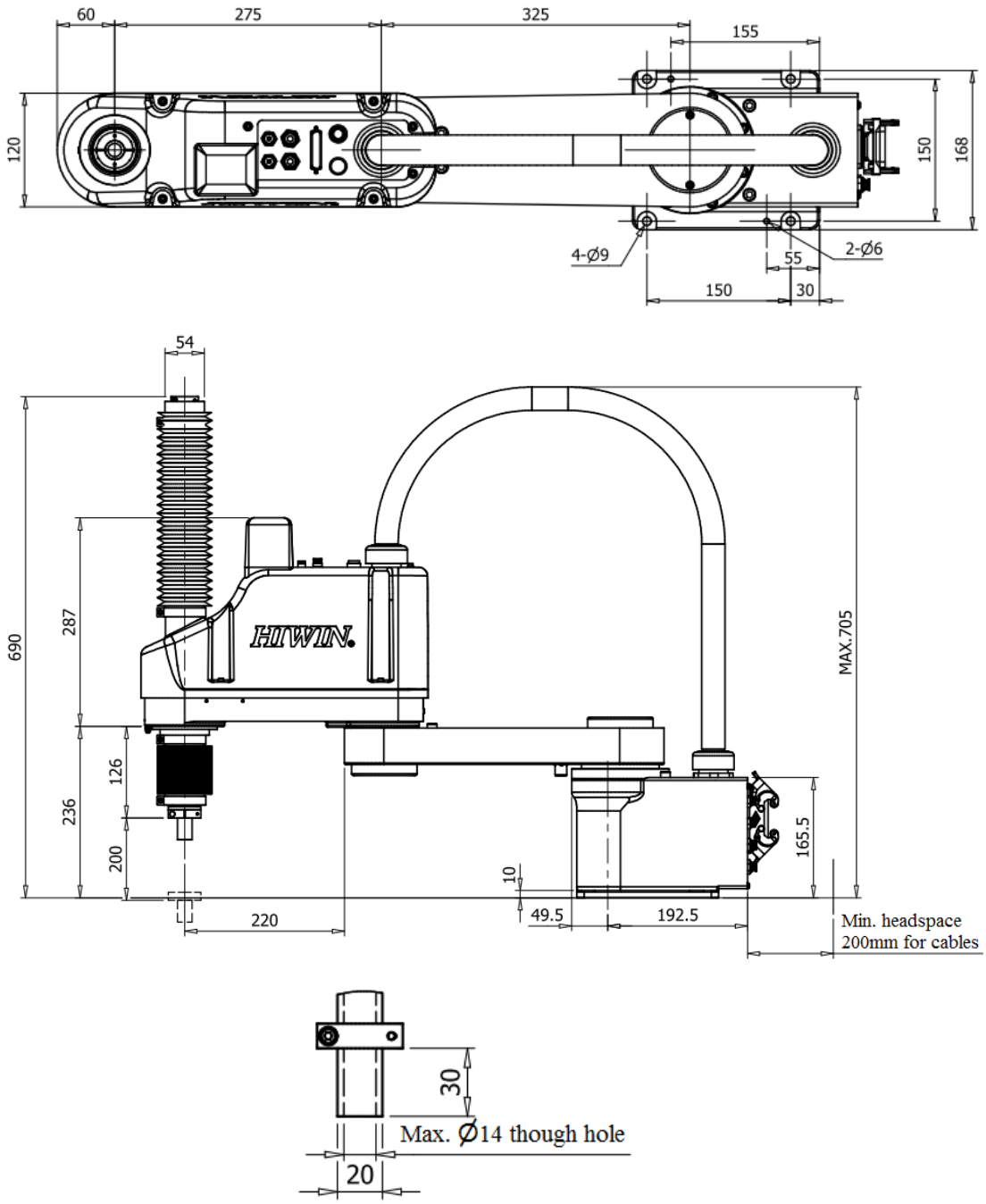

NOTE	➢ This dimension diagram is used for the reference, based on the approved ones or the actual ones. ➢ This dust-proof arm can prevent dust and water only from the end of ball screw spline into the arm body. Not all arms can have resistance to dust and water.

RS406-601S-H-B/RS406-601C-H-B motion range

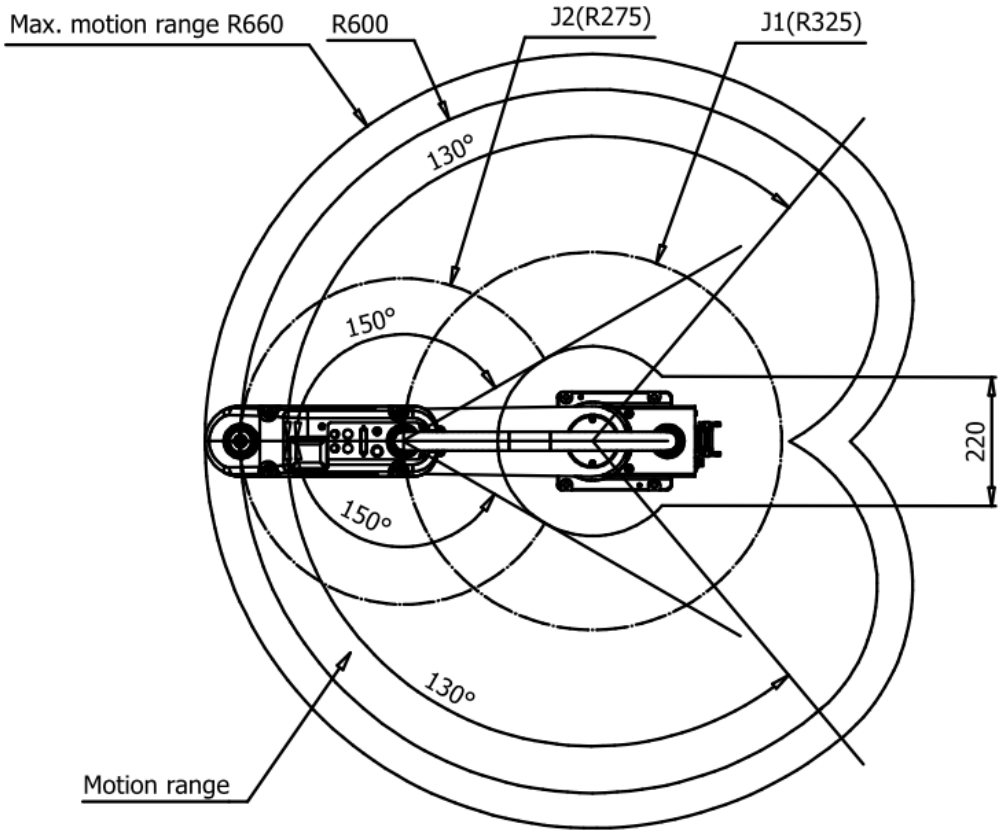

DANGER	➢ All motion ranges in this diagram is used for the reference. The dimensions are based on the approved diagrams or the delivered machines. ➢ The working range in this diagram doesn't include the end effector.

2-4 Specification Table

This manual takes RS406-601S-H-B for example, and describes the performance and the specification of the robot, as shown in the following table. The specifications for other model are based on the approved diagrams, which can contact the agent.

Specification Table for RS406-601S-H-B

Specification Table				
Model Number	RS406-601S-H-B			
Degree of Freedom	4			
Payload	Rated	kg		2
	Maximum			6
Maximum arm length (Arm A, and Arm B)		mm		600
Maximum motion range	J1	deg		±130
	J2	deg		±150
	J3	deg		±360
	J4	mm		200
Cycle time		sec		0.5
Repeatability		J1+J2	mm	±0.02
		J3	deg	±0.01
		J4	mm	±0.01
Maximum axial speed		J1	deg/sec	375
		J2		375
		J3		2000
		J4	mm/sec	1100
Permissible moment of inertia		Rated	$kg\text{-}m^2$	0.01
		Maximum		0.12
Arm I/O		3 Output Point 3 Input Point		
Pneumatic connector quantity/dimension		ψ4 x 2		
		ψ6x 2		
Arm weight (not including the control panel)		kg		22
Input power		V/A		AC 220V 1P 50 / 60 Hz
Maximum pneumatic input	Input pressure	kg / cm^2		8
	Vacuum pressure			1

3 Operating Environment

Before you operate the robot, you must ensure the operating environment can meet the related requirements to maintain the stability and lifetime.

Operating environment

Environmental condition	Operating environment	Storage environment
Temperature	5℃~45℃	5℃~45℃
Relative humidity	Less than 50%	Less than 50%
Assembly platform	Table	None
Power system	1P 200~240VAC	None

 DANGER	➢ Do not use the product outside specification. It may cause the product to fail, stop functioning or sustain damage. It may also significantly reduce the service life of the product. ➢ If the machine will stop in the event of system problem such as emergency stop or power failure, design a safety circuit or other device to prevent equipment damage or injury. ➢ Do not use this product in a place exposed to ignitable, inflammable or explosive substances. It may explode or ignite, resulting in product damage or injury. ➢ Please do not use the product with water and oil to avoid electric shock or fire. ➢ Before supplying power and operating the product, always check the operation area of the equipment to ensure safety. When operating or adjusting the gripper, be sure to obsere safety measures for the system. ➢ Please do not disassemble, maintain or modify the product to avoid personal accident, electric shock, fire disaster or fault damage.

	➢ Do not expose the product to radiant heat generated from a heat source, and use the product within the ambient temperature range of 5˚C to 45˚C. ➢ Use the product in humidity range of 35% to 85% (without dew condensation). ➢ Please use the product below altitude of 1000 meters. ➢ Do not use the product in an atmosphere of corrosive gases (sulfuric acid or hydrochloric acid). Rust may from and reduce the structural strength of the product. ➢ Do not use the product in a place exposed to dust, or iron power. If dust enters the product through small openings, the product may suffer damage. ➢ Please do not use the product near severe vibration. ➢ Please do not use the product near strong electromagnetic waves, locations that may generate electric arc, locations that may generate interference due to static electricity to avoid the abnormal operation of product. ➢ Please mount the product and End effect with adequate screw tightening torque. ➢ Please do not approach or touch the product while the product is operating. ➢ Turn off the power to product in the event of power failure. Failure to do so may cause the product to suddenly start moving when the power is restored, resulting in injury or product damage. ➢ If the product is generating heat, smoke, a strange smell or continual noise, turn off power immediately. Continuing to use the product may result in product damage or fire. ➢ Voltage Steady state voltage : from 0,9 to 1,1 of nominal voltage.

	➢ Frequency : From 0,99 to 1,01 of nominal frequency continuously; 0,98 to 1,02 for short time. ➢ Harmonics: harmonic distortion not exceeding 10% of the total r.m.s. voltage between live conductors for the sum from the 2nd through the 5th harmonic.An additional 2% of the total r.m.s. voltage between live conductors for the sum from the 6th through the 30th harmonic is allowed. ➢ Voltage interruotion Supply interrupted or at zero voltage for no more than 3ms at any random time in the supply cycle with more than 1s between two successive interruptions. ➢ Voltage dips: Voltage dips nor exceeding 20% of the peak voltage of the supply for more than one cycle with more than 1s between two successive dips. ➢ Intrinsically safe electrical equipment is designed to protected against the effects of transportation,and storage temperature within a range of -25℃ to +55℃ and for short periods not exceeding 24h at up to +70℃.
	➢ Install indoors to keep away from direct sunlight. ➢ Keep away from dust, mist, salt, metal powder or other pollutants. ➢ Keep away from flammable or corrosive solution and gas. ➢ Keep away from the environment with water and high moisture. ➢ The robot is not suitable in the coating environment. If it is operated at the place where doesn't meet the conditions above-mentioned, please contact us or the agent. ➢ The robot is operated only under the ambient environment. ➢ The surface of the robot for the special condition must be resistant to grease. If it could be

	stained with special grease, please contact us or the agent to confirm in advance. ➢ If the robot is operated in the environment with larger temperature and humidity change, water condensation could take place inside. When it is used to move food, please contact us or the agent to ensure it will not pollute food. ➢ The robot can't be operated in the acid or corrosive environment. In addition, the body could be corroded in the salty environment. ➢ When the product is unusable and scrapped, please follow the local waste disposal regulations for handling. ➢ When using this product, please wear safety shoes or the related protective equipment. ➢ It is necessary to wear protecting gloves while you are loading or unloading materials, changing parts or maintenance. ➢ The operator should wear face mask during operating machine, changing parts and fluid, maintenance, cleaning, etc. ➢ If the high level (over 500 mm) work was practiced, the safety work was practicticed, the safety working platform/stair/ladder shall be complied with the EN ISO 14122 series.

3-1 Install Robot

When you install the robot, please lock with M8 bolts. The bolt specifications need to meet ISO898-1:10.9 or 12.9. The base is installed on the lock surface. It is recommended the thickness be 20mm or more, and be made of the steel material to reduce the operating vibration. It is suggested the surface roughness be 25μm or less than 25μm. The other assemblies are installed with appropriate tools in accordance with the operating manual to avoid injury or damage by the improper operation.

When you install the robot, the working range must be taken into account. If the end effector is installed, the maximum motion range will vary (depending on the position and overhang of the end effector). Therefore, the safety area or the safety fence will be changed, and the operators should not enter the area to avoid injury or death when the robot operates.

Maximum motion range
(including the overhang distance of end effector)

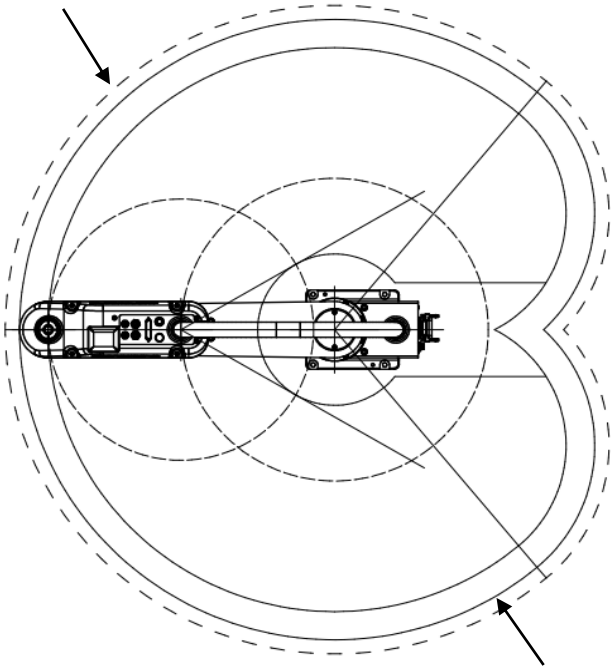

Arm operating range
(not including end effector)

	➢ When you install the robot, please consider the motion range (including the distance of end effector), and set up the warning or safety fence. ➢ The operators should not enter the area to avoid injury or death when the robot operates.

3-2 Disassemble Package and Transport

The robot must be installed by the authorized engineer, and complied with the national regulations. After you remove the package and take out the robot with a protective bag, please transport it to the installation position by appropriate facilities. The robot must be properly fixed during the transportation. The operator must note the personal safety to prevent pinch or hurt from strong vibration or object.

3-3 Transportation

Please following conditions When transporting, shifting, and storing, the operator must be professionally trained to perform the operation.Please note and observe the following operation:

- Transportation Precautions

The use of transport, unboxing, hanging operations, must be by a professional training personnel can operate. This work has a certain degree of risk, be sure to strictly abide by to prevent casualties.

- Vibration at transportaion

Avoid vibrating or shaking the machine arm during transport. Continued or violent vibration can cause damage to the arm components.

- Anchor bolts

When moving or installing the robot arm, it must be operated by a trained trainee, and be aware that the arm may be dumped before or after the installation of the anchor screw, which may result in personal injury or death. This work has a certain risk, we must strictly abide by, to prevent casualties.

- Wire tie

Do not remove the wire tie until the robot arm is positioned. This wire is fixed arm, to prevent the mobile or handling process, the machine arm sliding. When removing the wire tie, pay attention to the arm slip. This sliding phenomenon may cause casualties. This work has a certain degree of risk, be sure to strictly abide by, to prevent casualties.

- When two people carry the arm by hand, follow these steps:

Step 01. Adjust the robot arm posture, A arm, B arm moved to the mechanical stop position.

Step 02. Turn off the power.

Step 03. Please bundle with drawstring, rope, etc., to avoid moving the arm posture in handling, resulting in injuries.

Step 04. Please Hold the shaded area handling operations.

The posture of the robot arm is shown below

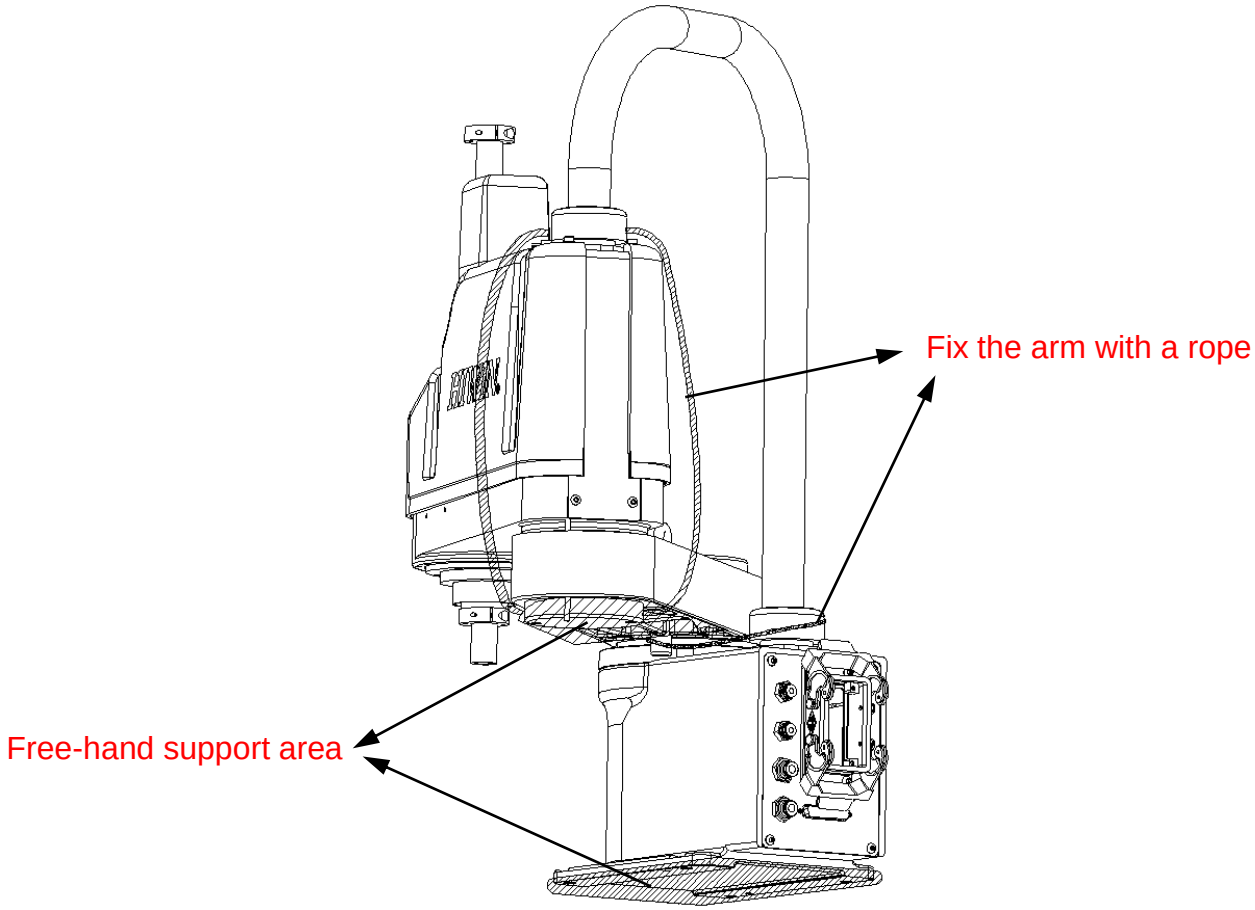

 WARNING	➢ The authorized staff can operate crane or forklift only. When those without authorization perform the operations above-mentioned, the surrounding operators could be injured or the robot could be damaged.

 CAUTION	➢ Transport the robot with a cart. ➢ The robot must be delivered by two operators or more when transported with bard hands. The base, Arm A or Arm B are held with two hands. Don't pull black flexible conduit or any connector. ➢ When you adjust the position to install the robot, please hold it with two hands so that it drops to pinch the operator.

	➢ The robot must be indeed fixed on the transportation facility to avoid collision, falling and damage when transported in long distance.

4 Install End Effector

4-1 Installation Notice

When you install the end effector, please obey the following items.

1. Don't remove or change any mechanical stopper on the robot by yourself.
2. When you install the end effector on ball screw spline, please install it at 30mm on the lower end of ball screw spline and fix with the threaded structure over M4.
3. When you install the end effector, please note weight, static torque and moment of inertia are in the motion range. For the method to calculate static torque and moment of inertia, please refer to 5-2 Overview for Calculating Static Torque and Moment of Inertia.

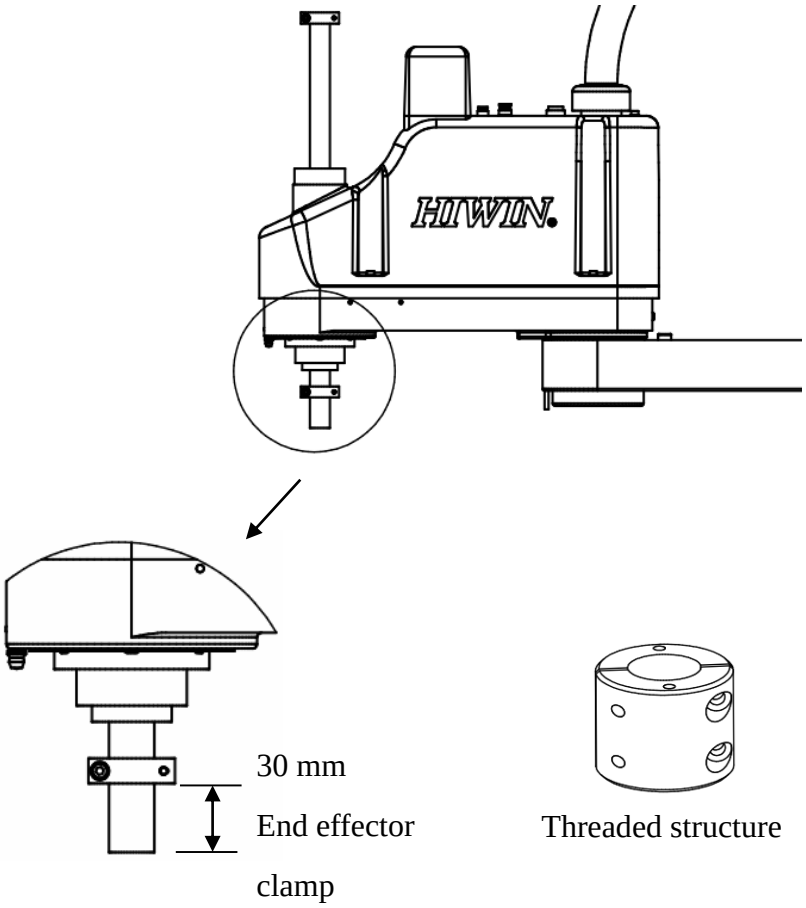

NOTE	➢ If there are some doubts on weight, static torque and moment of inertia, please contact us or the agent.

4-2Overview for Calculating Static Torque and Moment of Inertia

4-2-1 Calculate Static Torque

The permissible static torque for this robot is 150N.m, determined by M (torque) = F (force) × L (end fixture/effector overhang plus total arm length), and must be less than 150N.m. Please obey the operating condition. If the torque exceeds this value, the performance and lifetime will be reduced.

Formula to calculate static torque:
M (torque) = F (force) × L (overhang plus total arm length)

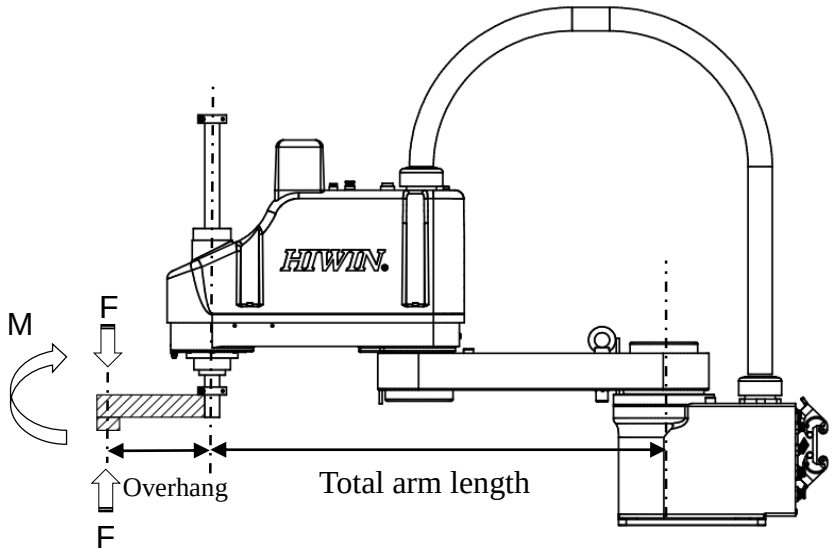

NOTE	➢ Please calculate if permissible static torque is greater than 150N.m prior to the operation. ➢ If the torque is greater than this value, the performance and lifetime will be reduced.

4-2-2 Calculate Moment of Inertia

Moment of inertia is quantity used to indicate a force is against the rotation of an object. When a fixture/an end effector are installed on the end of ball screw spline, moment of inertia for the loaded device must be taken into account.

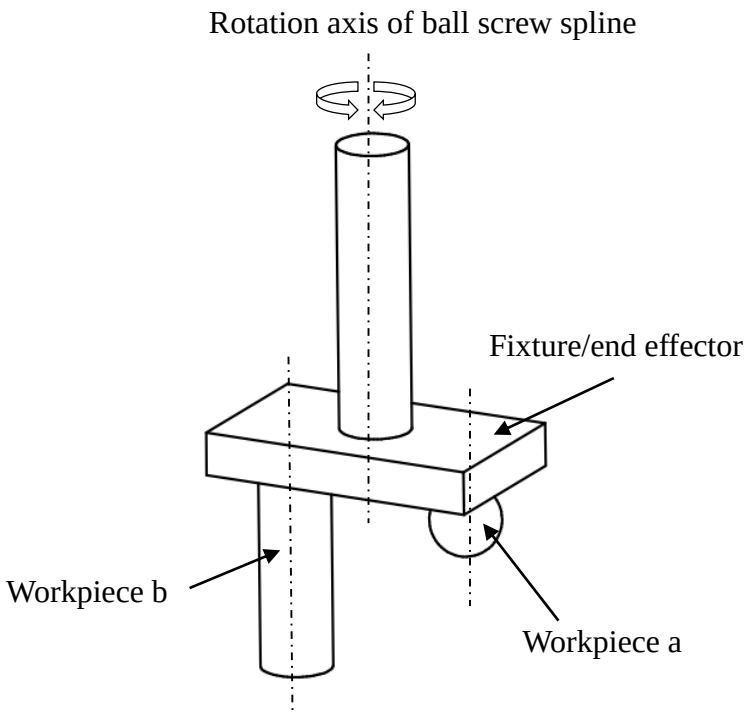

Total moment of inertia at the end of ball screw spline	=	Moment of inertia of fixture/end effector	+	Moment of inertia of Workpiece a	+	Moment of inertia of Workpiece b

NOTE	➢ Please calculate if total moment of inertia at the end of ball screw spline is within rated/maximum permissible inertia. ➢ If moment of inertia is greater than the value, the performance and lifetime will be reduced.

The methods to calculate moment of inertia of an object are as shown in (a), (b) and (c). Please refer to the methods to calculate moment of inertia for the basic shape, and determine moment of inertia of the object.

(a) Moment of inertia of rectangle

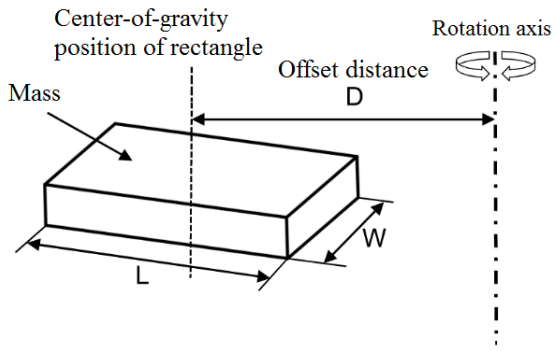

$$\mathbf{m}\frac{W^2 + L^2}{\mathbf{12}} + m \times D^2$$

(b) Moment of inertia of cylinder

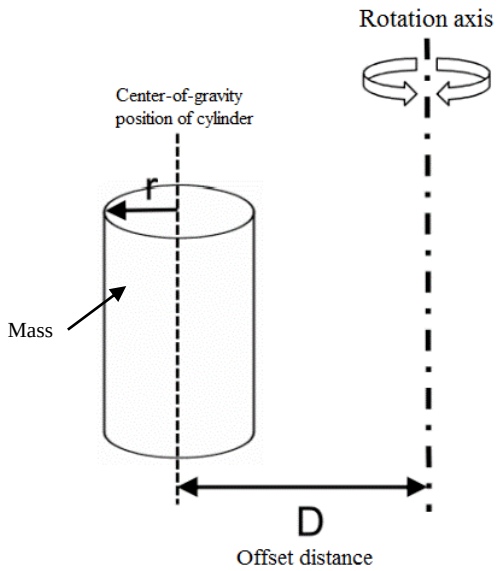

$$\mathrm{m}\frac{\mathrm{r}^2}{2} + m \times D^2$$

(c) Moment of inertia of sphere

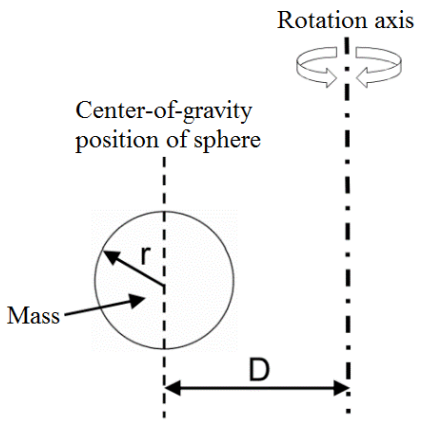

$$\mathbf{m}\frac{\mathbf{2}}{\mathbf{5}}r^2 + m \times D^2$$

Maintenance

5 Robot Maintenance

In order to ensure the robot can efficiently operate and protect the operator safety, please periodically maintain the robot according to the following sections. Don't disassemble the motor, decelerator and ball screw spline for the maintenance by yourself to influence the accuracy of the robot. If there is any failure, please contact the agent.

5-1 Cover

The cover is locked on the upper side of Arm B, which includes J2, J3 and J4 motors and two drive belts. You can remove the cover to check there are foreign objects in Arm B, ball screw spline is damage and the belts are worn.

 DANGER	➢ Please disconnect the power on the control panel and unplug the power prior to the maintenance. Don't make any maintenance when the robot operates, so that can avoid electric shock or improper operation.

 CAUTION	➢ In the period of maintenance, the robot should not contact any objects to prevent electronic components from short circuit or damage ball screw spline. Otherwise, the robot could damage when the power is distributed.

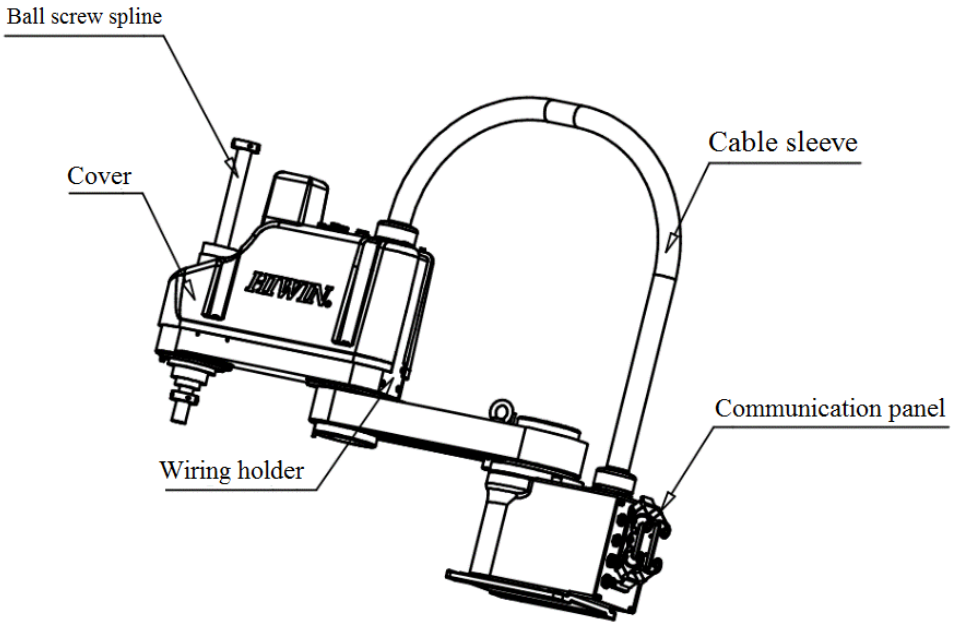

Figure 0-1 Robot Illustration

5-1-1 Disassemble Cover

CAUTION	➢ Don't force to disassemble the cover. Otherwise, it could cause poor cable contact or damage as well as electric shock or robot failure. ➢ Don't remove the cable sleeve when you disassemble the cover, and avoid excessively pulling it so that the circuit drops or breaks to cause the robot failure. ➢ Don't continuously apply force and heavily press/push to the cover protrusion. Otherwise, it could break or damage.
NOTE	➢ Do not remove the captive screws of the cover.

Step 01. Turn off the power on the control panel.

Step 02. Remove the external M4 screws.

Step 03. Disassemble the robot cover from down to up.

Step 04. Keep the screws and the cover well to avoid missing or damage.

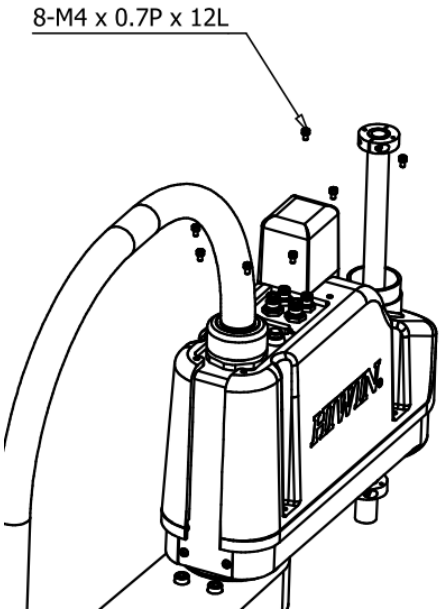

Illustration of Cover Screw

5-1-2 Install Cover

CAUTION	➢ Note that the internal circuits are excessively bent when you install the cover. Otherwise, it could cause poor cable contact or damage. ➢ Note that ball screw spline is interfered with the cover when you install the cover, and the screws are fastened to complete the installation. ➢ Don't continuously apply force and heavily press/push to the cover protrusion. Otherwise, it could break or damage.

Step 01. Turn off the power on the control panel.

Step 02. Install the robot cover from up to down.

Step 03. Ensure the cover doesn't interfere with any parts and pipes.

Step 04. Fasten the external M4 screws.

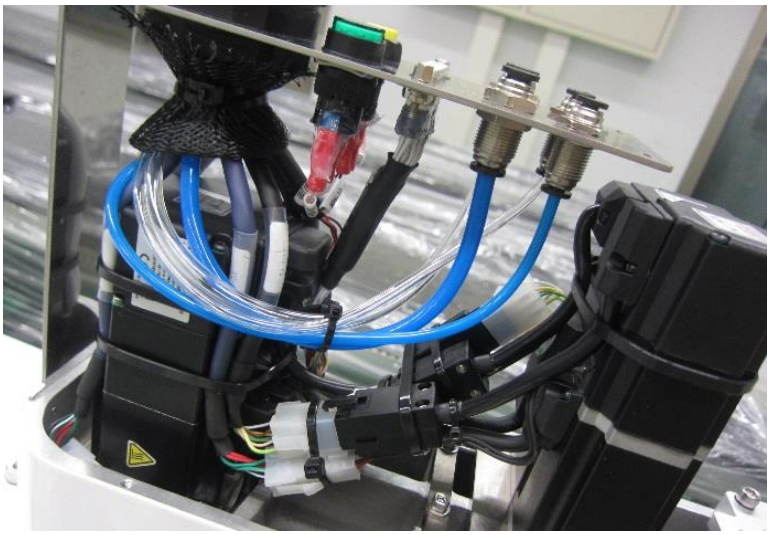

Figure 0-2 Internal Piping Layout

5-2 J3 & J4 Axes

J3 & J4 axes employ 100W servo motors. With the link of the belt wheel and the belt, the rotational and linear motions of ball screw spline are controlled. A user can remove the cover to check there is any failure inside the Arm B.

	➢ Please press the Emergency Stop button before the maintenance. Don't make any maintenance when the robot runs, so that the operators could be hit or the incorrect run could take place.

	➢ Don't remove J3 & J4 motors without the authorization to influence the running accuracy of the robot.

5-2-1 Check J3 & J4 Belts

There are two drive belts installed in the robot, which are used to link the servo motor and ball screw spline. A user must periodically check the belts are worn, and confirm the belt tension meets the requirements to ensure the robot can efficiently run.

Table 0-1 J3 and J4 Belts

	Name		Quantity	Remark
Part	J3 and J4 belts	Width: 10mm	1	AT5-375-10
		Width: 15mm		AT5-390-15
Tool	Allen wrench (5mm for diagonal width)		1	M6 screw (recommended torque: 70kgf-cm)
	Tension meter		1	Belt tension J3:100~105N, J4:30~35N
Parameter	J3 belt	M=3g/m, W=15mm, S=112mm (Note 1)		
	J4 belt	M=3g/m, W=10mm, S=114mm (Note 1)		

Note: M (unit mass), W (belt width), and S (line length)

Step 01. Turn off the power on the control panel.

Step 02. Disassemble the robot cover (Please see 5-1-1 Disassemble Cover.).

Step 03. Press the Emergency Stop button after the power is supplied.

Step 04. Slightly release the screws for J3 and J4 plates.

Step 05. Adjust the tension screws on the back of the plate.

Step 06. Use the tension meter to measure the belt tension, 100N~105N for J3-axis and 30N~35N for J4-axis.

Step 07. Hold the Release Brake button, and push ball screw spline upwardly and backwardly to ensure the tension in each section meets the requirement.

Step 08. Fasten the screws for J3 and J4 plates.

Step 09. Turn off the power on the control panel.

Step 10. Install the robot cover.

RS4006-601S-H-B / RS406-601C-H-B Belt Tension Adjustment

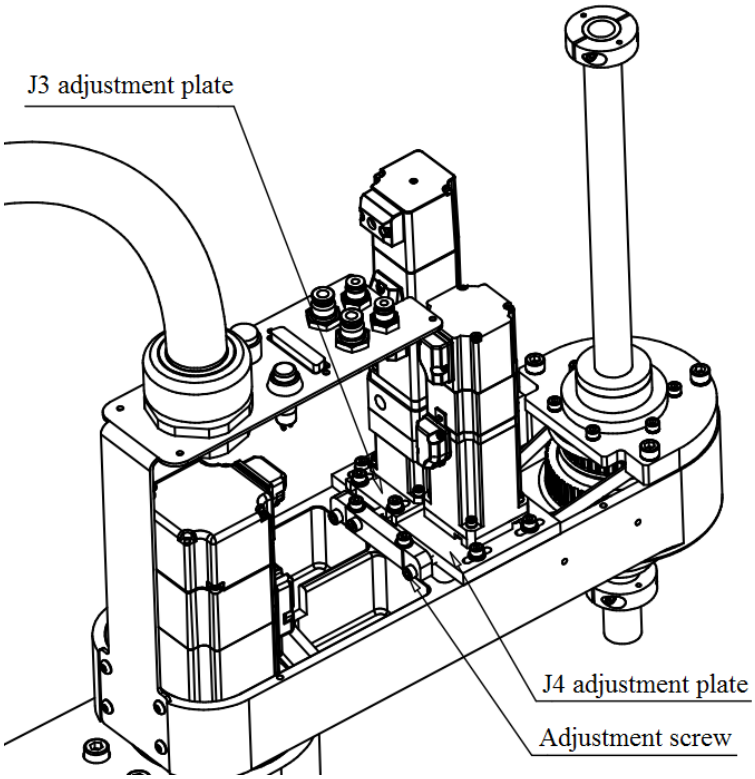

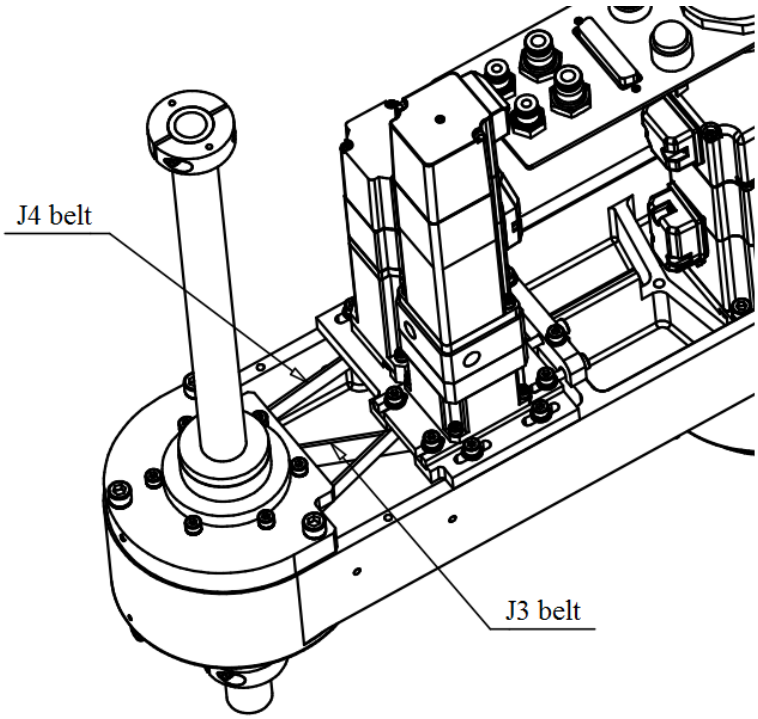

5-3 Grease Lubrication

There are many movable joints and parts on the SCARA Robot. The decelerator and ball screw spline must be periodically serviced and maintained. Because ball screw spline is exposed in the open environment for long time to easily accumulate dust or insufficiently lubricate, a user must pay more attention so that the robot can efficiently operate.

5-3-1 Lubrication of Ball Screw Spline

Ball screw spline is used for the rotation (J3-axis) and linear (J4-axis) motion of the robot, supported by two sets of nut respectively. The bearing in the nut needs to be periodically greased, and the external grooves of ball screw spline must be kept clean, so that ball screw spline can smoothly run.

	➢ Please press the Emergency Stop button and disconnect the power prior to the maintenance. Don't make any maintenance when the robot operates, so that can avoid electric shock or improper operation.

	➢ Don't remove ball screw spline without the authorization to influence the running accuracy of the robot.

Lubrication of Ball Screw Spline

Lubrication part	Item	Check	Operation
Roller spline	Lubrication	Check once per three month when the running distance reaches 100km.	Fill new lubricant into the nut, and remove old grease. Recommended fill: 2c.c.
Ball screw nut			
Roller spline			Fill new lubricant into the nut, and remove old grease. Recommended fill: 4c.c.
Spline nut			
Roller spline bearing			Fill new lubricant into the nut, and remove old grease. Recommended fill: 5c.c.
Ball screw spline			Uniformly apply grease on the screw surface in the grooves.

Illustration of Lubricating RS406-601S-H-B Ball Screw Spline

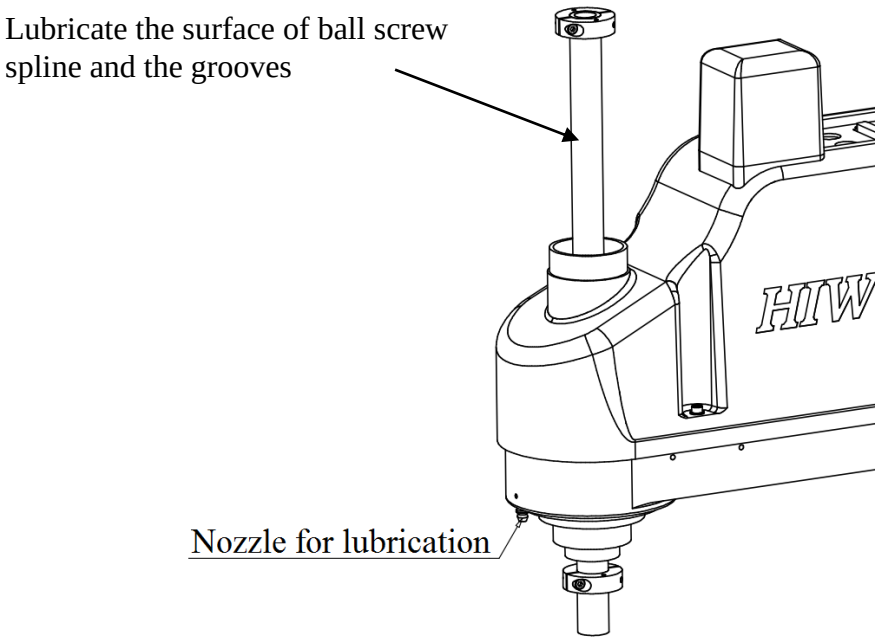

Lubricating Nozzle for Ball Screw Spline

5-3-2 Decelerator Lubrication

The base, the Arm A and the Arm B of the robot are linked by the decelerator to provide the rotation motion for J1 and J2 axes. Because the lubricant is fully covered in the decelerator, the insufficient lubrication will not take place. However, the tear and wear of the mechanical structure could make noise from the decelerator, even poor position accuracy, please contact the agent as soon as possible.

 CAUTION	➢ The decelerator should be disassembled by he trained or authorized engineers only to avoid the accuracy and lifetime of the robot. ➢ The lubricant should be replaced by the trained or authorized engineers only to avoid the accuracy and lifetime of the robot.

Maintenance Item	Period	Operation
Replacement of decelerator lubricant	Running up to 6000 hours or per 18 months	Described as Table 5-3
Check on back clearance of decelerator	Per 2.5 years	New parts should be replaced if the clearance is greater than the permissible value.

Area to apply grease	Operation	Reference Diagram
Flexible bearing grooves	Fill the roller space with grease.	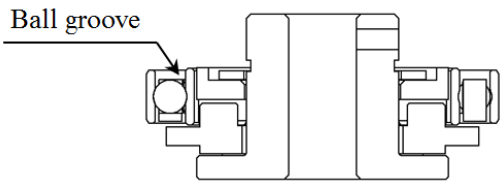

Decelerator body	1. Remove old grease in the wall of the flexible wheel, and fill in new one. 2. Fill new grease in the groove of the rigid wheel (fill via the gear gap). 3. For grease filling, please refer to Table 5-4.	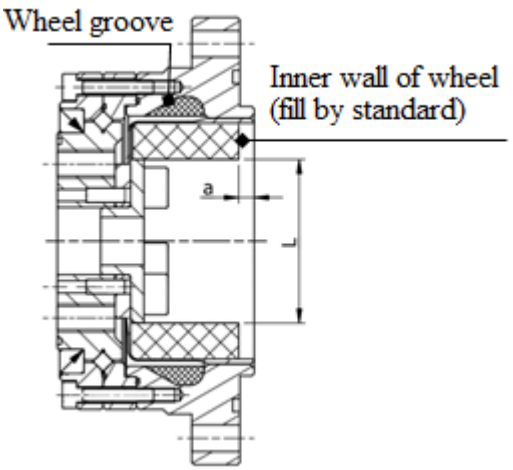

Specification / Grease capacity	Unit	J1	J2
Inner wall of flexible wheel	g	40~52	21~27
Groove of rigid wheel	g	14	6
A (reference dimension)	mm	5	3
L (reference dimension)	mm	47~51	38~41

Description to disassemble RS406-601S-H-B / RS406-601C-H-B decelerator

Steps to disassemble the decelerator

Step 01. Turn off the power on the control panel.

Step 02. Remove the screws on the Arm A.

Step 03. Remove the M8 screws and washer for Arm A.

Step 04. Remove the M5 screws and washer for the decelerator and the motor plate.

Step 05. Disassemble the decelerator upwardly in the vertical direction.

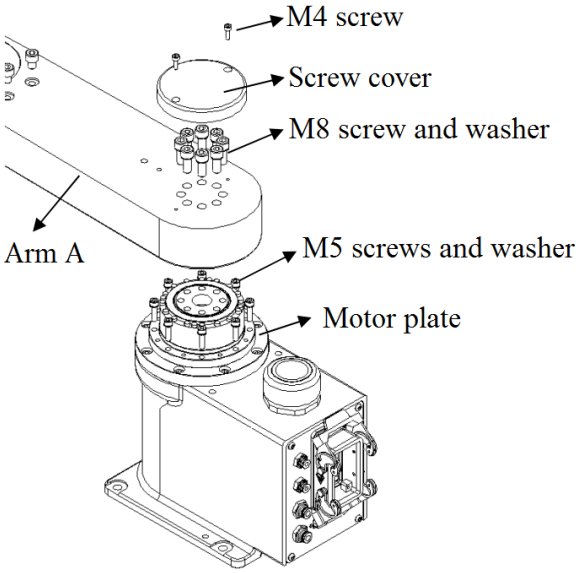

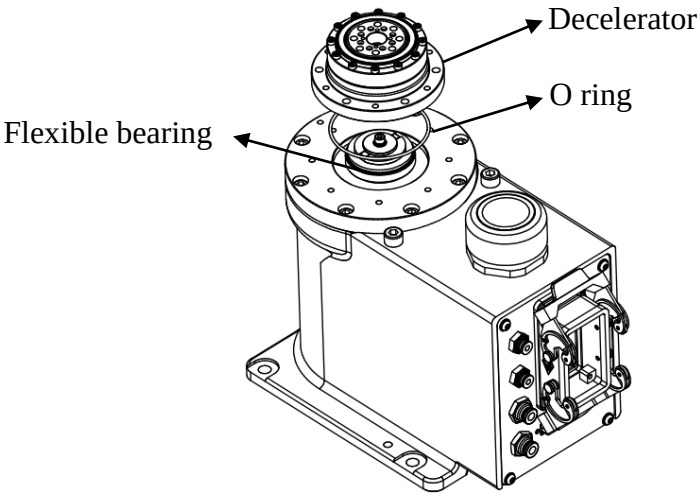

NOTE	➢ Please keep each origin part and component when you disassemble the decelerator. Don't assemble the decelerator with non-origin parts. ➢ The decelerator can be disassembled and installed by the trained or authorized engineer.

Disassemble the decelerator for Arm B

Step 01. Turn off the power on the control panel.

Step 02. Remove the screw cover on the Arm B.

Step 03. Remove M6 screws on the bottom of Arm A.

Step 04. Remove the Arm B.

Step 05. Remove the M5 screws and washer for the decelerator and the Arm B.

Step 06. Disassemble the decelerator upwardly in the vertical direction.

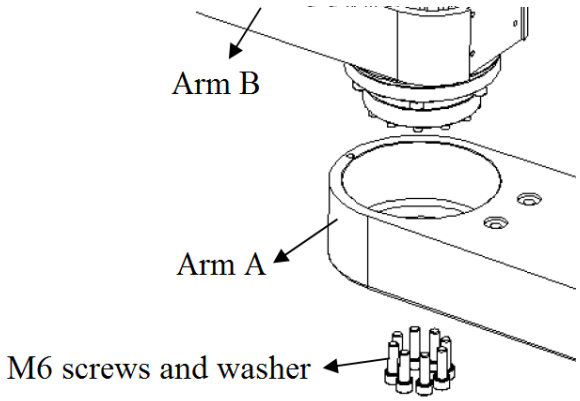

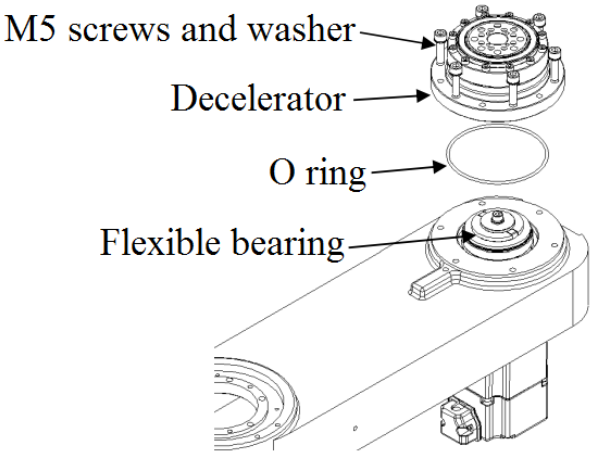

NOTE	➢ Please keep each origin part and component when you disassemble the decelerator. Don't assemble the decelerator with non-origin parts. ➢ The decelerator should be disassembled and installed by the trained or authorized engineer.

5-4 Wiring Panel

There are the communication cables, pneumatic pipes and driver batteries in the wiring panel. A user can replace the batteries by removing the cover, so that can maintain the memory of the robot coordinate.

5-4-1 Remove Wiring Panel

CAUTION	➢ The wiring panel should be removed by the trained engineer to avoid internal circuit damage, electric shock or robot damage. ➢ Don't force to pull the wiring panel. Otherwise, it could cause internal pipe falling, damaged communication cable or poor contact

Step 01. Turn off the power on the control panel.

Step 02. Remove the external M4 screws.

Step 03. Take out the wiring panel backwardly.

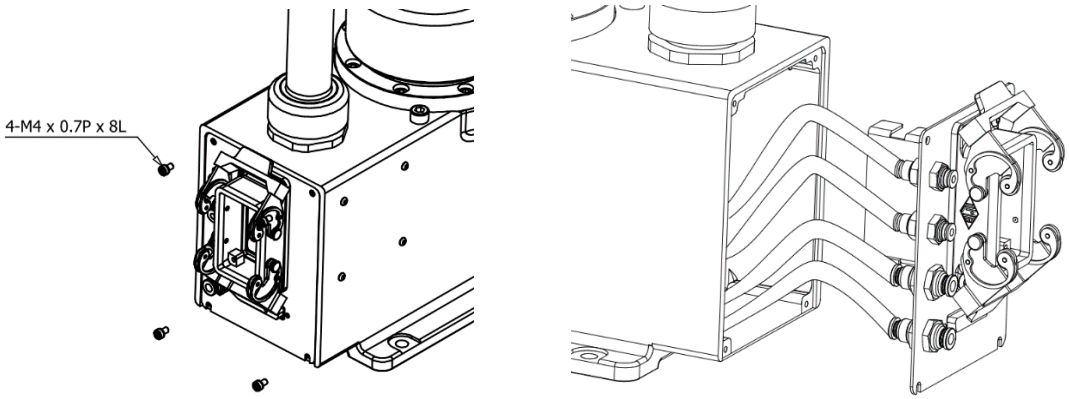

Diagram to Remove Wiring Panel

5-4-2 Install Wiring Panel

CAUTION	➢ When you install the connection board, you must note that the internal circuit interferes with the connection board to seriously bend and damage the circuit or cause poor contact. ➢ There are pneumatic pipes in the connection board. The pipes should be not excessively bent to avoid supply failure when you install, and further influence the end fixture of the root.

Step 01. Turn off the power on the control panel.

Step 02. Install the wiring panel.

Step 03. Fasten the external M4 screws.

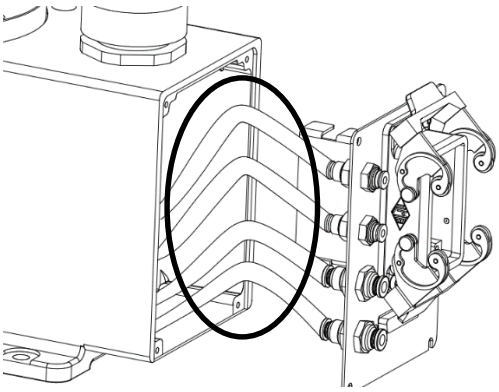

Correct installation

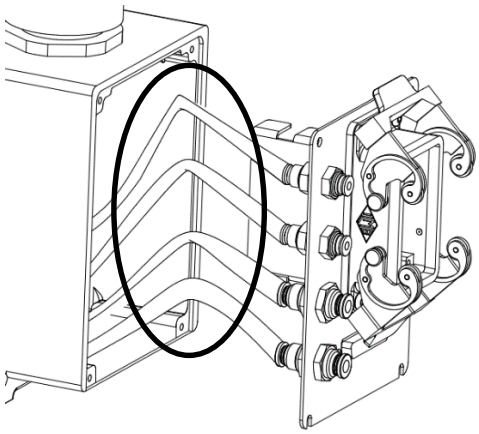

Incorrect installation

Diagram to Install Wiring Panel

5-4-3 Replace Battery

The batteries, located on the internal side of the wiring panel, are used to record the value of the driver at each axis after power failure takes place. A user must periodically replace them to ensure the robot coordinates can be memorized.

CAUTION	➢ Please press the emergency button and disconnect the power prior to the maintenance. Don't make any maintenance when the robot operates, so that can avoid hit or improper operation.

NOTE	➢ If the batteries are replaced when the power on the control panel is not supplied, the coordinates at each axis can't be recorded. The robot home must be recalibrated. ➢ The industrial lithium batteries are used for memory. Don't replace them with commercial alkaline or rechargeable one.

Step 01. Remove the wiring panel.

Step 02. Turn on the power on the control panel, and press the Emergency Stop button.

Step 03. Take out 4 batteries in order.

Step 04. Install new batteries in order (primary lithium battery 3.6V/2.4AH for TADIRAN No. 3).

Step 05. Turn off the power on the control panel.

Step 06. Install Wiring Panel (please see).

Step 07. Turn on the power on the control power to test the coordinates at each axis.

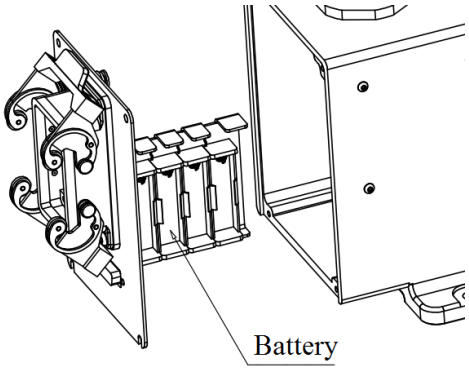

Standard SCARA, Battery Holder on Wiring Board

5-5 Maintenance Period

Contents related to service and maintenance

Check Item	Part Name	Daily	Monthly	Quarterly	Twice a year	Yearly
Check the screws/bolts are loose.	Base bolts	V	V	V	V	V
	Robot bolts					V
	Bots for ball screw spline					V
Check the communication cables/power cable connectors are loose.	Communication cable	V	V	V	V	V
	Power cable connectors for control panel		V	V	V	V
Check the appearance is dirty or damaged, and clean and wipe it.	Robot appearance	V	V	V	V	V
	Appearance of communication cable	V	V	V	V	V
	Appearance of control panel	V	V	V	V	V
Check the communication cables/power	Communication cables	V	V	V	V	V
	Power cables on control panel	V	V	V	V	V

cables/pneumatic pipes are excessively bent or broken.	Pneumatic cables				V	V
Check belt tension	J3 and J4 axes (See: 5-2-1)				V	V
Grease Lubrication	ball screw spline (See: 5-3-1)			V	V	V
Grease lubrication	Decelerator (See: 5-3-2) *1					
Replace Battery	Driver battery (See: 5-4-1)					V

*1: For the maintenance time in each item, please follow 5-3-2.

5-6 Maintenance Parts List

- RS406

Part Name		Code	Note
Reduction Gear Unit	Joint #1	AK0000D1	
	Joint #2	AK0000C1	
Ball Screw Spline		A12Q3HA2	410 mm
Belt	Joint #3	453100PM	
	Joint #4	453100PL	
Arm Cover		4CC00042	White
O-ring	Joint #1	3454000L	
	Joint #2	3454000B	

5-7 Electrical parts list

- RS406

Part Name		Code	Rated Power	Voltage	Max.Curent	Frequency
AC Servo Motor	Joint #1	FRLS402B4007	400W	220V	7.8A(rms)	250 Hz
	Joint #2	FRLS202B4008	200W		5.1 A(rms)	250 Hz
	Joint #3	FRMS102B4003	100W		2.7 A(rms)	200 Hz
	Joint #4	FRLS102B4004	100W		2.7 A(rms)	250 Hz

6 Troubleshooting

6-1 Offset

Upon the position is offset when the robot operates, please immediately stop all operations and execute the home command, so that the robot can read the relative position at each station. If the condition for the serious position offset can't be modified by resetting the home, please contact customer service for calibration.

6-2 Overheat

The robot is equipped with a mechanism of temperature protection. The incorrect working temperature will influence the operations. A user must maintain the appropriate environment temperature. As soon as the temperature rise in the system takes place owing to the fan failure, the robot will stop the operation. Please contact customer to replace the fan.

The motor drivers at each axis are equipped with a protection mechanism. The high temperature or acceleration/deceleration will stop the operation of the robot. You must recover the system setting by restarting it. A user can keep the robot normally operating by changing the system setting.

- Lower acceleration and velocity when the robot runs.
- Reduce the time when the robot continuously runs.

6-3 Noise from Machine

The robot comprises several slide and rotation parts and components. It is recommended a user periodically lubricate each part and component, so that the robot can smoothly operate. As soon as noise is generated when the robot operates, please contact customer service for check and maintenance.

6-4 Jog

When you evaluate to operate the robot, please carefully read the specifications. The efficiency of the robot depends on the fixtures or objects loaded on ball screw spline. If the loads exceed the requirements, a user can maintain the normal operation of the robot by changing the system setting or seek the assistance from customer service.

- Reduce acceleration and velocity when the robot operates.
- Modify the fixture dimension and weight.

7 Appendix

7-1 EC Declaration of Conformity

Opinion Response

Issue	Actual condition
Suggestion:	
E-mail: business@hiwin.tw Customer hotline: +866-4-23594510	

HIWIN®
Motion Control and System Technology

HIWIN TECHNOLOGIES CORP.
No. 7, Jingke Road,
Taichung Precision Machinery Park
Taichung 40852, Taiwan
Tel : 04-23594510
Fax: 04-23594420
www.hiwin.tw
business@hiwin.tw

The specifications in this catalog are subject to change without notification.

© 2017 FORM C07UE303-1701
(PRINTED IN TAIWAN)